TABLE OF CONTENTS

1- scale print of THOMPSON 1928-A1 upper

1- scale print of THOMPSON 1928 trigger frame

1- scale print of MP-38

1- scale print of BROWNING BAR AUTOMATIC

1- scale print of VICKERS right side plate

PARTS SUPPLIERS ON LAST PAGE

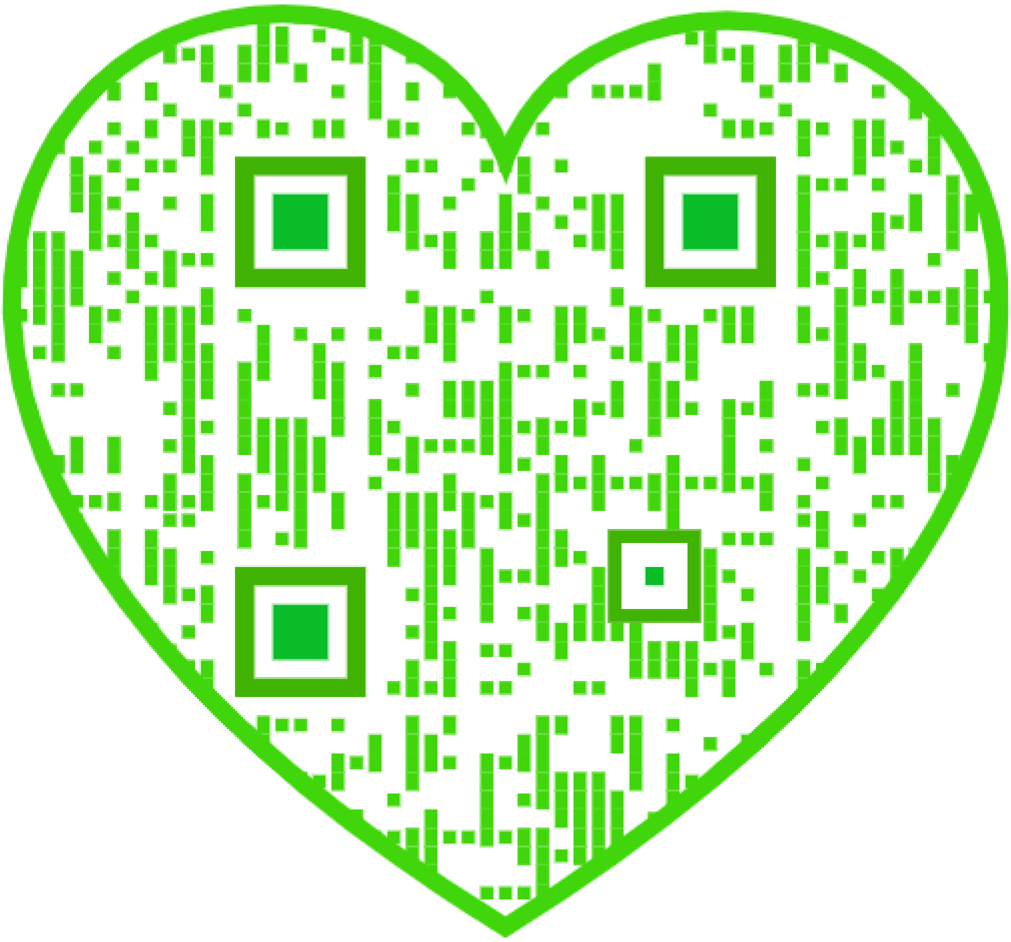

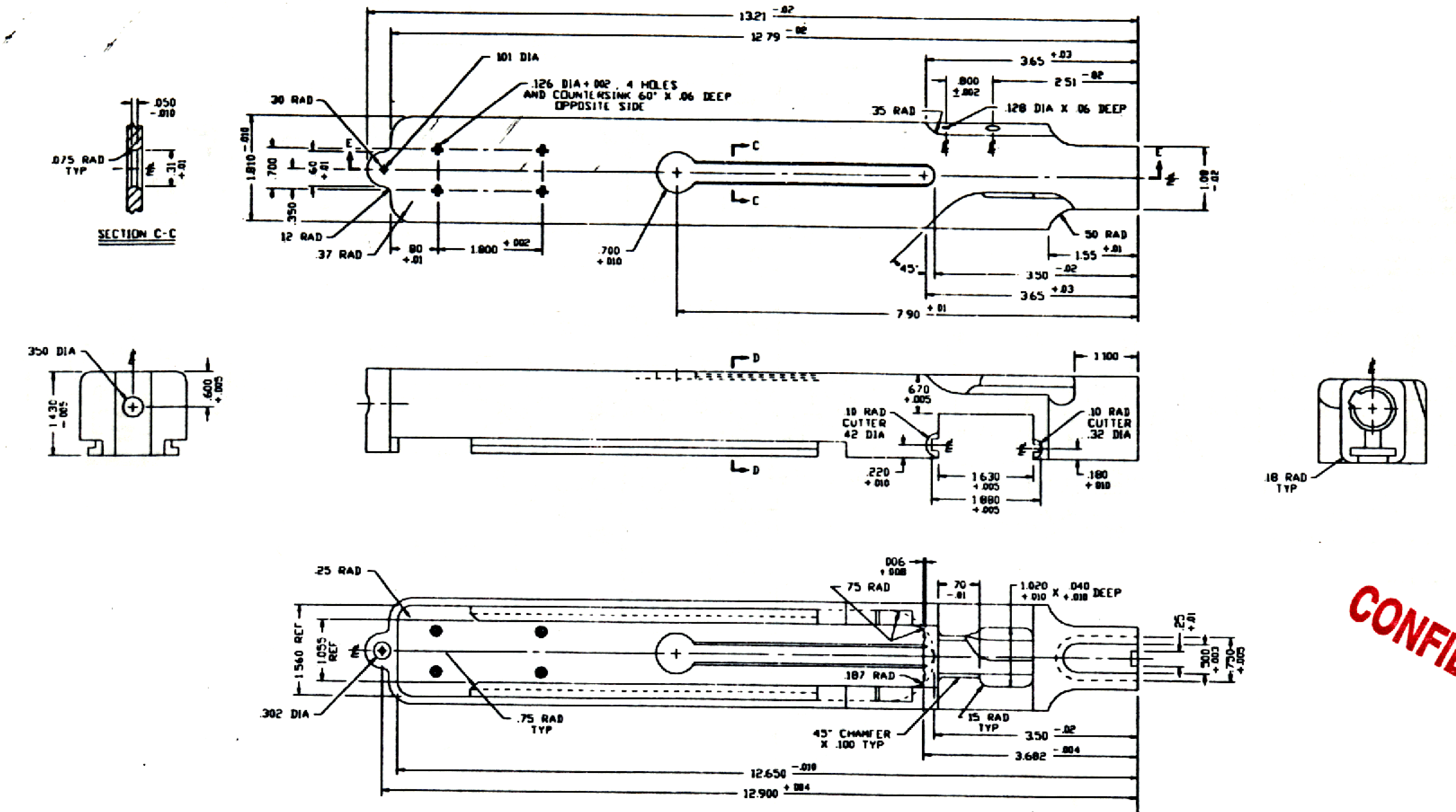
SECTION C-C
.050 -.010
.075 RAD TYP
350 DIA
1.430 -.005
.600 +.005
13.21 -.02
12.79 -.02
101 DIA
30 RAD
.126 DIA +.002, 4 HOLES AND COUNTERSINK 60° X .06 DEEP OPPOSITE SIDE
12 RAD
.37 RAD
.80 +.01
1.800 +.002
.700 +.010
1.810 -.010
365 +.03
2.51 -.02
.800 ±.002
35 RAD
.128 DIA X .06 DEEP
50 RAD
1.55 +.01
45°
350 -.02
365 +.03
7.90 +.01
1.00 -.02
1.100
.670 +.005
10 RAD CUTTER 42 DIA
10 RAD CUTTER .32 DIA
.220 +.010
1.630 +.005
1.880 +.005
.180 +.010
18 RAD TYP
25 RAD
.006 +.008
75 RAD
.70 -.01
1.020 +.010 X .040 +.010 DEEP
1.560 REF
1.055 REF
.302 DIA
187 RAD
.75 RAD TYP
45° CHAMFER X .100 TYP
15 RAD TYP
350 -.02
3.682 -.004
12.650 -.010
12.900 +.004
.500 +.003
.750 +.005

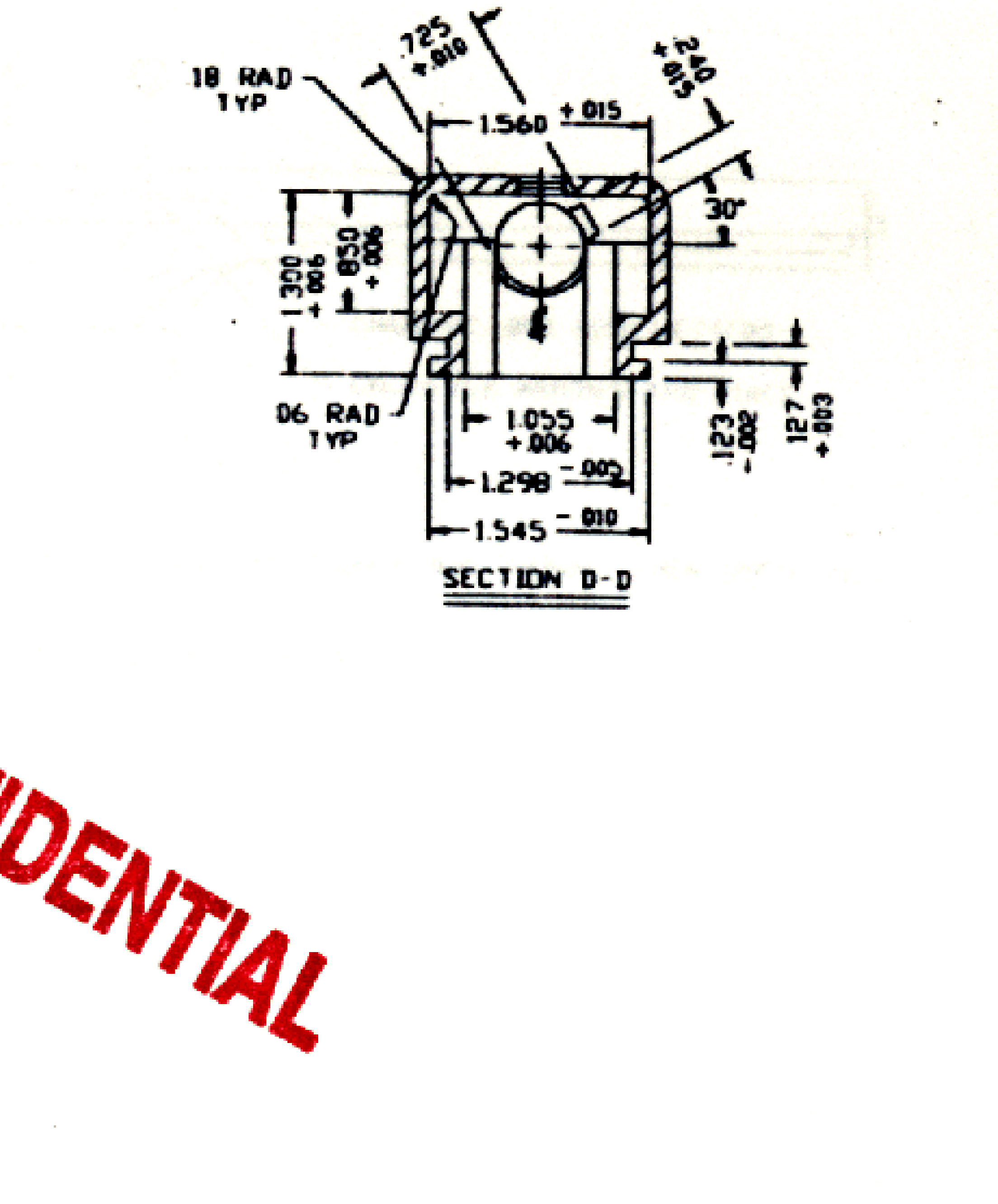
18 RAD TYP
.725 +.010
1.560 +.015
30°
1.300 +.006
.850 +.006
06 RAD TYP
1.055 +.006
1.298 -.005
1.545 -.010
.123 -.002
.127 +.003
SECTION D-D

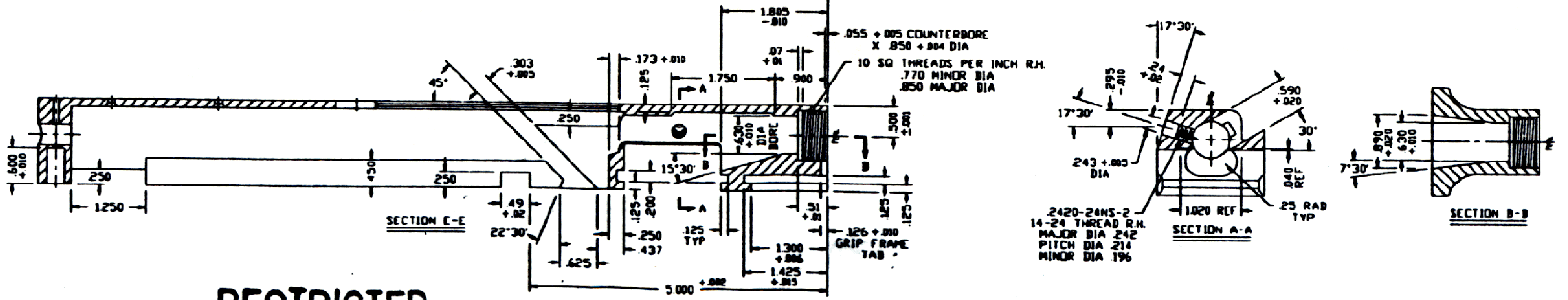
1.885 -.010
.055 +.005 COUNTERBORE X .850 +.004 DIA
10 SQ THREADS PER INCH R.H. .770 MINOR DIA .850 MAJOR DIA
.303 +.005
45°
.173 +.010
1.750
.07 +.01
.900
.250
.600 +.010
.250
1.250
.450
.250
.620 +.010 DIA BORE
.500 +.001
15°30'
.49 +.02
22°30'
.125
.200
.250
.437
.125 TYP
.625
.51 +.01
.126 +.010 GRIP FRAME TAB
1.300 +.006
1.425 +.015
5.000 +.002
SECTION E-E
17°30'
.295 -.010
17°30'
.243 +.005 DIA
.590 +.020
30°
.040 REF
.25 RAD TYP
1.020 REF
.2420-24NS-2
14-24 THREAD R.H.
MAJOR DIA .242
PITCH DIA .214
MINOR DIA .196
SECTION A-A
.890
.630
7°30'
SECTION B-B

GENERAL NOTES AND SUGGESTIONS

1. MATERIAL - 1018-4130 STEEL.
2. FINISH- PAKERIZE FOR ALL A-1'S
   BLUE FOR 28 COMMERCIAL
   BUT BY ALL MEANS SUIT YOURSELF.
3. BREAK ALL SHARP EDGES
4. INSTEAD OF .126 RIVET HOLES I SUGGEST DRILL # 43 AND TAP # 4-40 THREADS AND ATTACH REAR SIGHT WITH BUTTON SOCKET CAP SCREWS
5. FOR LETTERING REFER TO THE THOMPSON SUBMACHINE GUN BY ROGER COX.
6. CORRECTED FROM 1957 ORDNANCE PRINT WITH CORRECT DIMENSIONS OF A 1928 THOMPSON RECEIVER.

CONFIDENTIAL

RESTRICTED
MATERIAL

SCALE: FULL	MATERIAL: SEE NOTE 1	CHK	TOLERANCES DEC 2 PL. ± [illegible] DEC 3 PL. ± [illegible] ANGLES ± [illegible]
DWN	FINISH SEE NOTE 2	DATE	
TITLE THOMPSON SUBMACHINE GUN RECEIVER MODEL 1928-A1		REV.	NO.

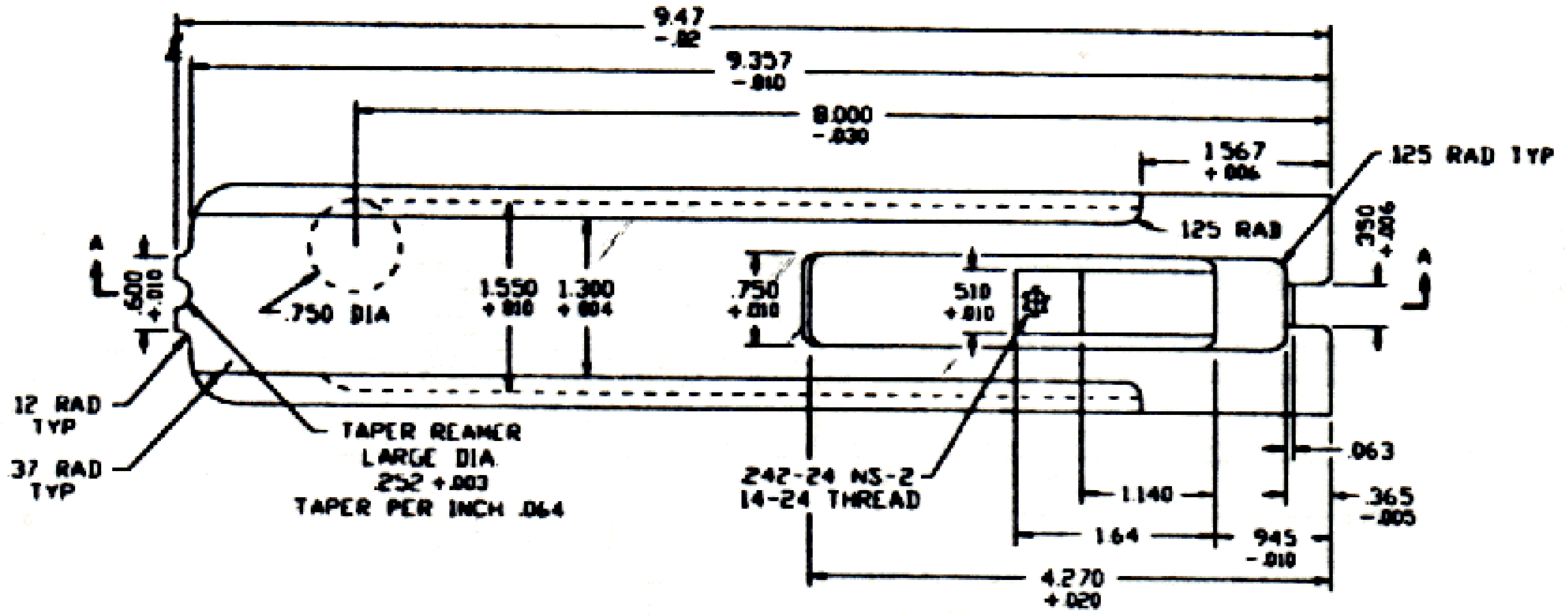
9.47 -.02
9.357 -.010
8.000 -.030
1.567 +.006
125 RAD TYP
125 RAD
.350 +.006
A
.600 +.010
.750 DIA
1.550 +.010
1.300 +.004
.750 +.010
.510 +.010
12 RAD TYP
37 RAD TYP
TAPER REAMER LARGE DIA .252 +.003 TAPER PER INCH .064
242-24 NS-2 14-24 THREAD
.063
1.140
1.64
.365 -.005
.945 -.010
4.270 +.020

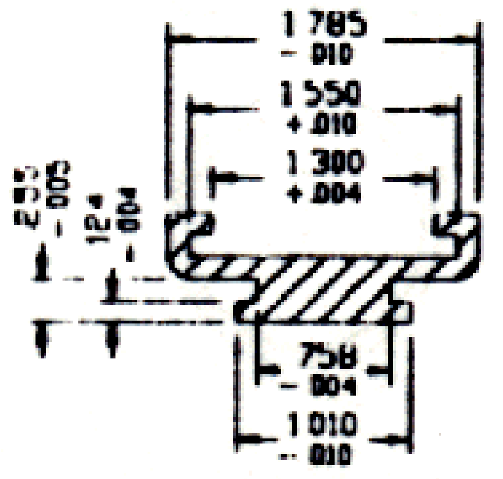
1.785 -.010
1.550 +.010
1.300 +.004
.255 -.005
.124 -.004
.758 -.004
1.010 -.010

SECTION B-B

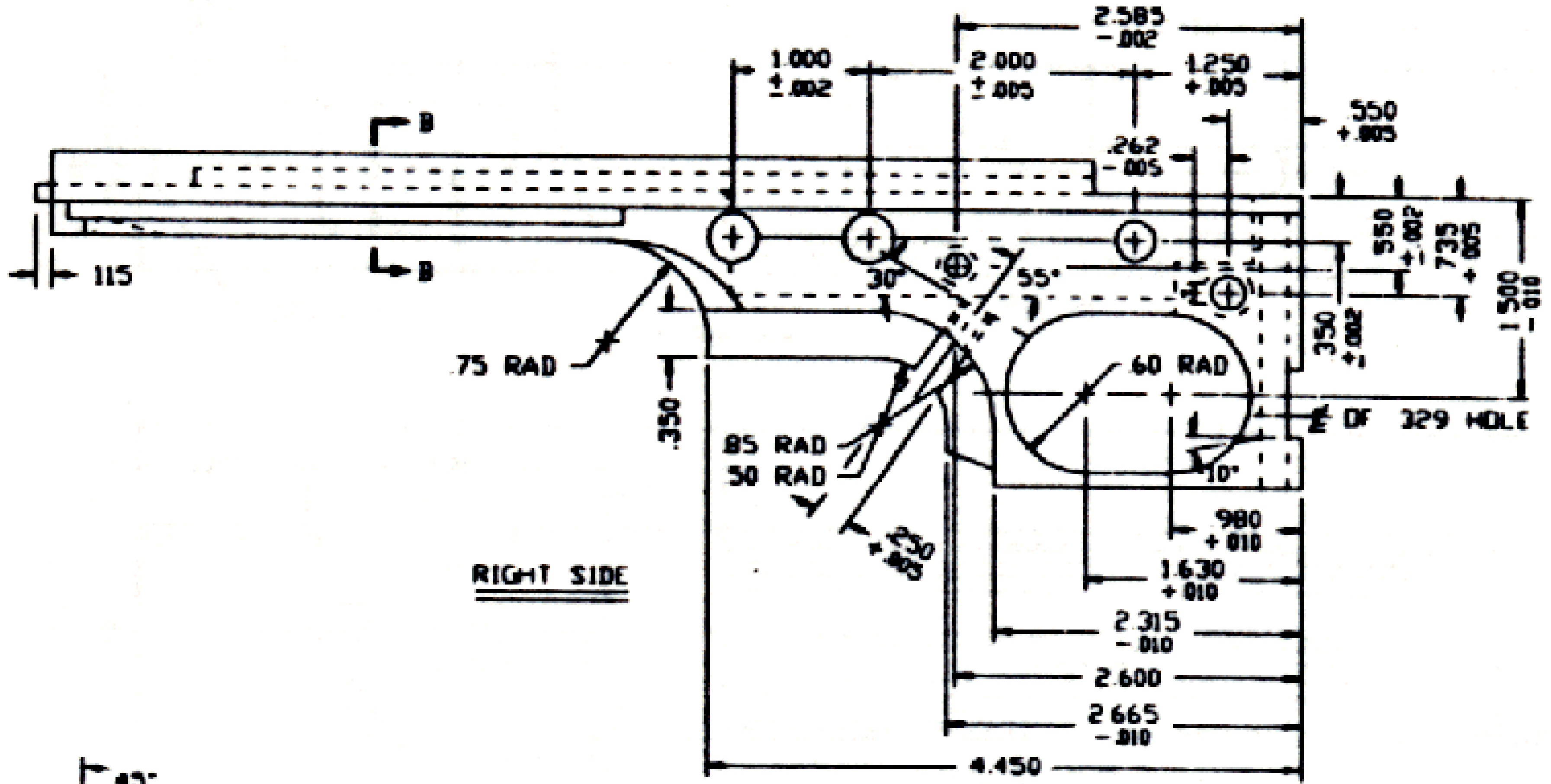
2.585 -.002
1.000 ±.002
2.000 ±.005
1.250 +.005
.550 +.005
.262 -.005
B
.115
.75 RAD
30°
55°
.550 +.002
.735 +.005
1.500 -.010
.350 +.002
60 RAD
.350
.85 RAD
.50 RAD
10°
.250 +.005
Ø OF .329 HOLE
.980 +.010
1.630 +.010
2.315 -.010
2.600
2.665 -.010
4.450

RIGHT SIDE

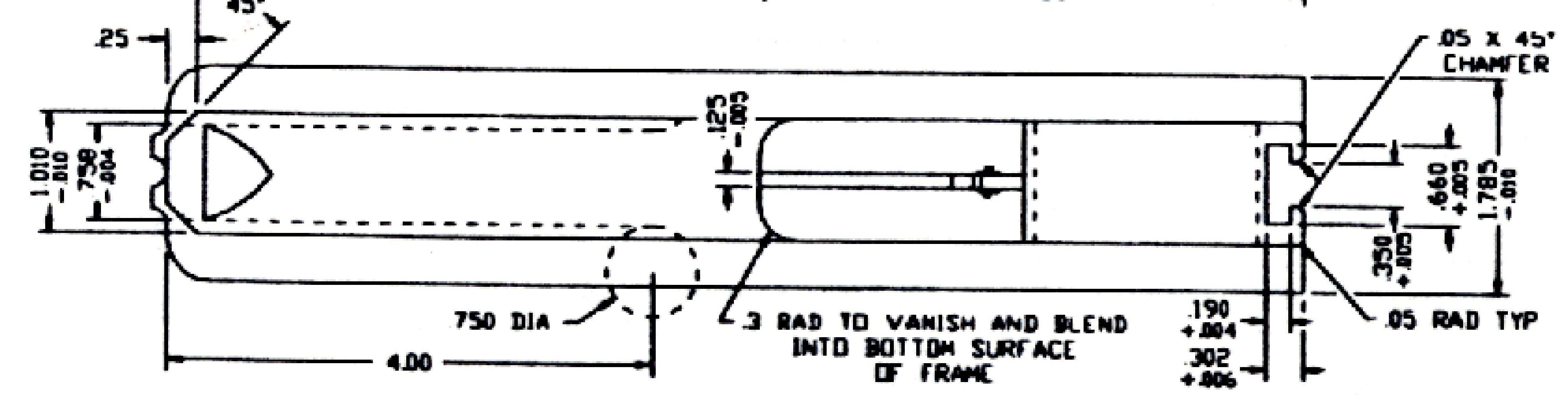
45°
.25
.05 X 45° CHAMFER
1.010 -.010
.758 -.004
.125 -.005
.640 +.005
1.785 -.010
.350 +.005
.05 RAD TYP
750 DIA
.3 RAD TO VANISH AND BLEND INTO BOTTOM SURFACE OF FRAME
.190 +.004
.302 +.006
4.00

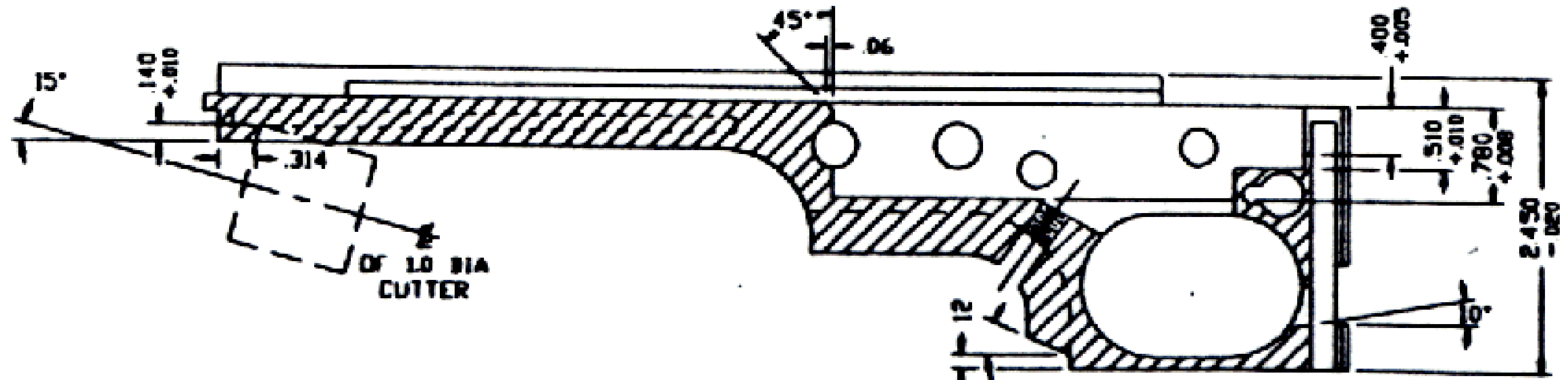
45°
.06
15°
.140 +.010
.314
Ø OF 1.0 DIA CUTTER
.400 +.005
.510 +.010
.780 +.005
2.450 -.020
12
23°
0°

SECTION A-A

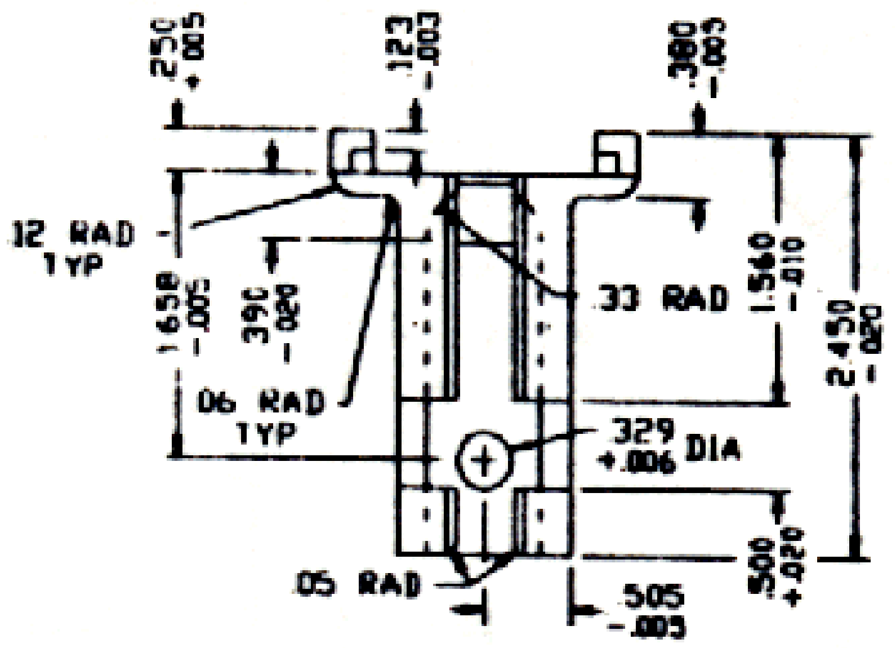
.250 -.005
.123 -.003
.380 -.005
12 RAD TYP
1.658 -.005
.390 -.020
33 RAD
1.540 -.010
2.450 -.020
06 RAD TYP
.329 +.006 DIA
05 RAD
.505 -.003
.500 +.020

HOLE DRILLING SEQUENCE

DRILL ALL HOLES BEFORE CUTTING POCKET

① DRILL 5/32" X .875 DEEP AT .262 DIMENSION
DRILL 1/4" THRU AT .550 DIMENSION
DRILL 3/8" X .875 DEEP AT .550 DIMENSION

② DRILL 5/16" THRU AT 1.250 DIMENSION

③ DRILL "N" (302) X 5/8" DEEP AT 2.585 DIMENSION
DRILL #14 (182) THRU AT 2.585 DIMENSION

④ DRILL 3/8" THRU

⑤ DRILL 3/8" THRU

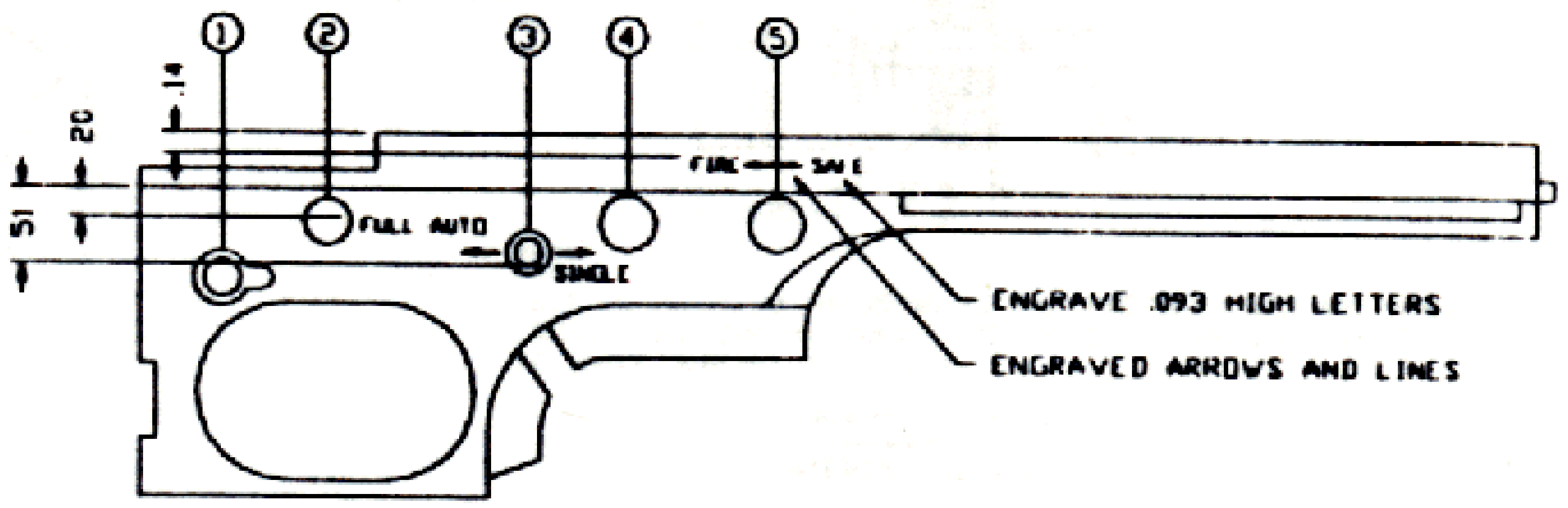
①
②
③
④
⑤
.14
.20
.51
FIRE
SAFE
FULL AUTO
SINGLE
ENGRAVE .093 HIGH LETTERS
ENGRAVED ARROWS AND LINES

LOCATE LETTERS, ARROWS AND LINES AS DIMENSIONED AND SHOWN, THEN WHITE FILL

LEFT SIDE

HOLE AND LETTERING PLACEMENT

CONFIDENTIAL

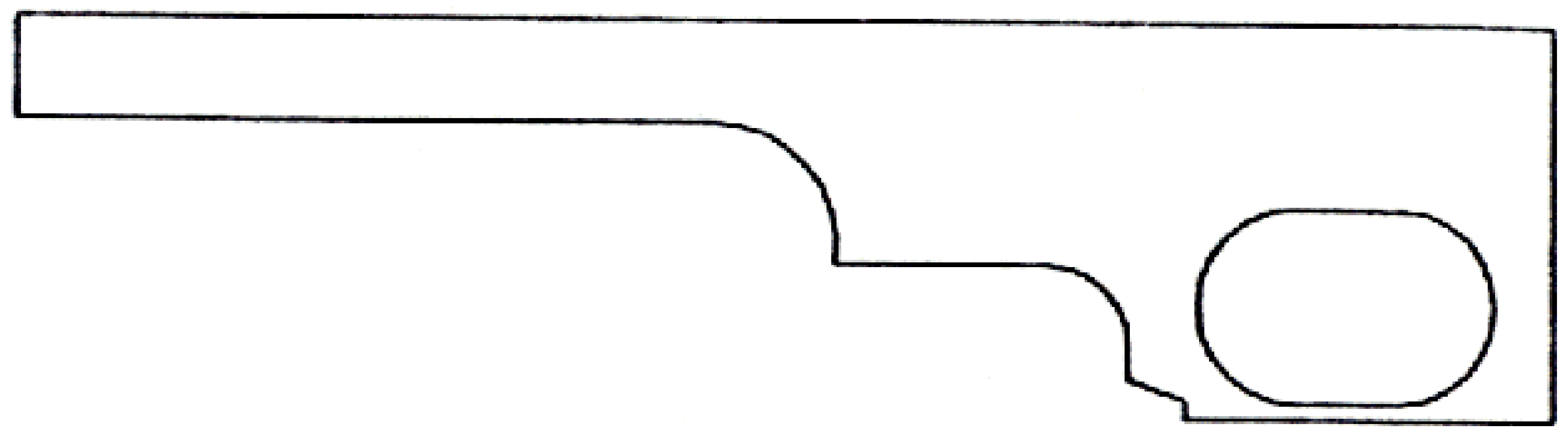

TEMPLATE FOR ROUGH SAWING OF STEEL BLOCK

RESTRICTED MATERIAL

NOTE:
1. MATERIAL- 1018-4130 STEEL

SCALE: FULL	MATERIAL: SEE NOTE 1	CKD	TOLERANCES DEC 2 PL ± [illegible] DEC 3 PL ± [illegible] ANGLES ± [illegible]
DWN	FINISH	DATE	
TITLE MODEL 1928 THOMPSON SUBMACHINE GUN TRIGGER FRAME		REV.	NO.

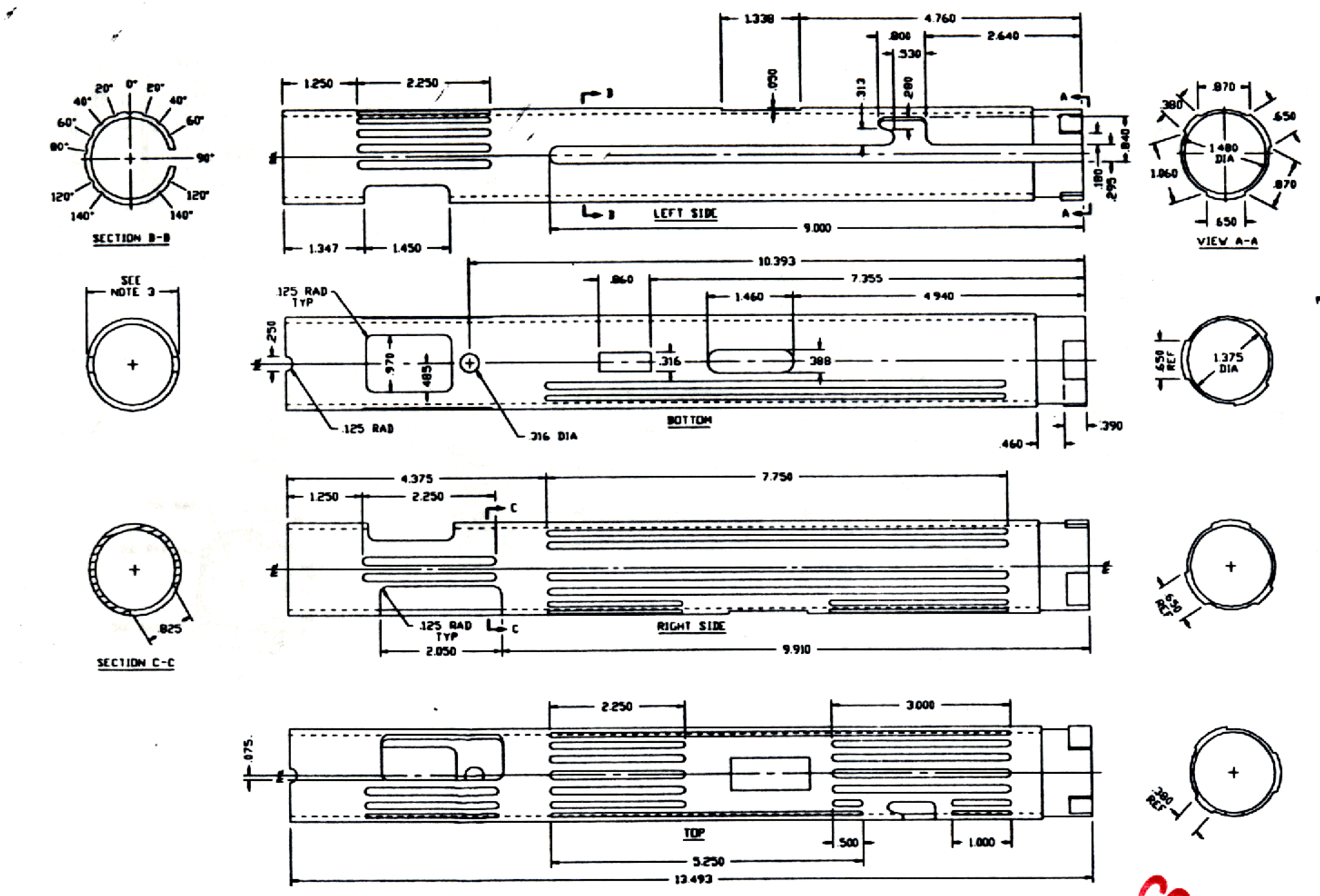
SECTION B-B
0°
20°
40°
60°
80°
90°
120°
140°
SEE NOTE 3
SECTION C-C
.825
1.250
2.250
1.338
4.760
.800
.530
2.640
.313
.280
B
A
LEFT SIDE
1.347
1.450
9.000
.840
.180
.295
VIEW A-A
.870
.650
1.480 DIA
1.060
.870
.650
.380
10.393
.860
7.355
1.460
4.940
.125 RAD TYP
.250
.970
.485
.316
.388
.125 RAD
.316 DIA
BOTTOM
.460
.390
1.375 DIA
.650 REF
4.375
7.750
1.250
2.250
C
.125 RAD TYP
2.050
RIGHT SIDE
9.910
.650 REF
2.250
3.000
.875
TOP
.500
1.000
5.250
13.493
.380 REF

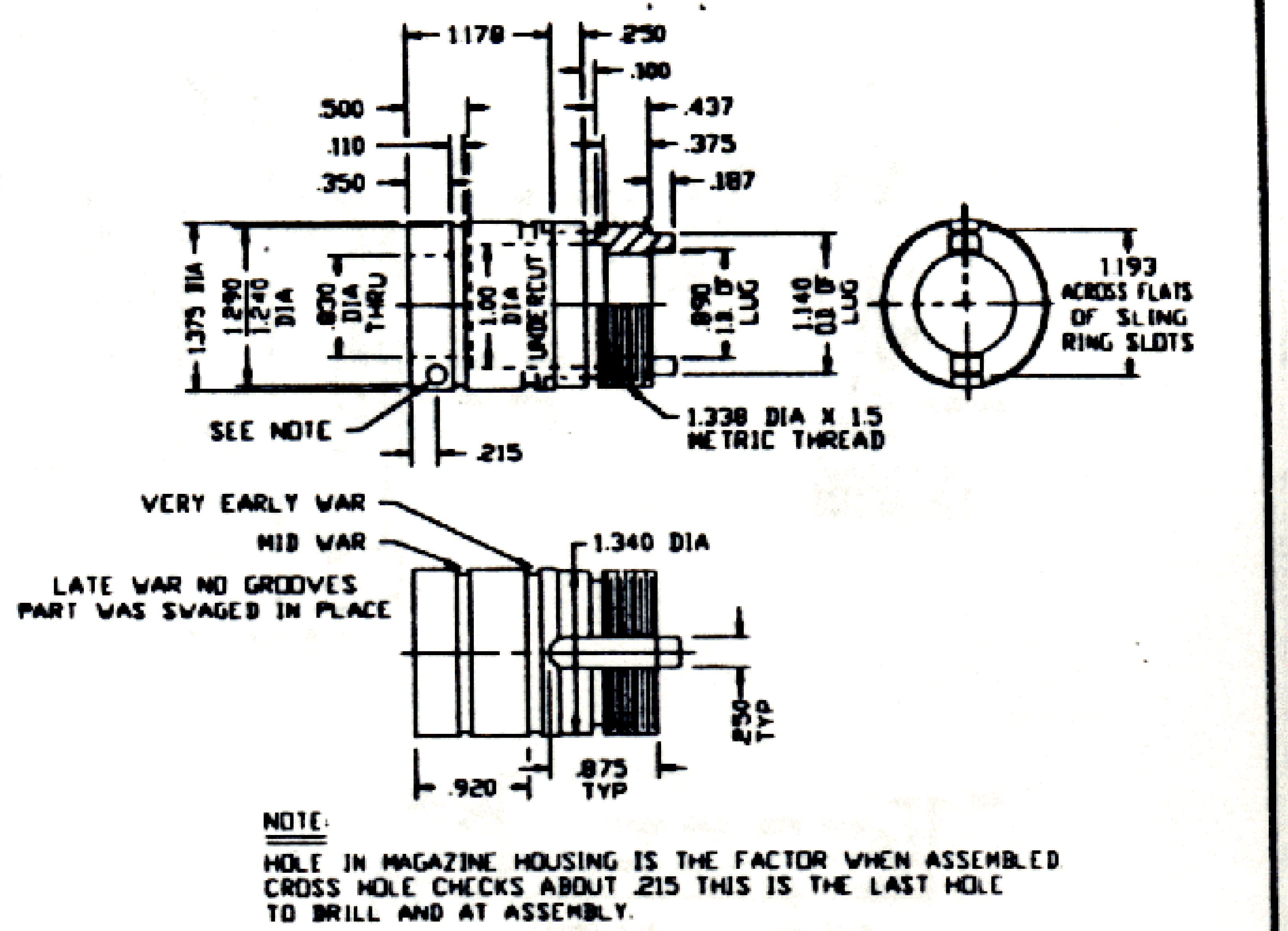
1.178
.250
.100
.500
.110
.350
.437
.375
.187
1.375 DIA
1.290
1.240 DIA
.830 DIA THRU
1.100
UNDERCUT
.890 LUG
1.140 LUG
1.193 ACROSS FLATS OF SLING RING SLOTS
SEE NOTE
.215
1.338 DIA X 1.5 METRIC THREAD
VERY EARLY WAR
MID WAR
LATE WAR NO GROOVES
PART WAS SWAGED IN PLACE
1.340 DIA
.920
.875 TYP
.250 TYP

NOTE:
HOLE IN MAGAZINE HOUSING IS THE FACTOR WHEN ASSEMBLED
CROSS HOLE CHECKS ABOUT .215 THIS IS THE LAST HOLE
TO DRILL AND AT ASSEMBLY.

BARREL BUSHING

MATERIAL: 1020 STEEL

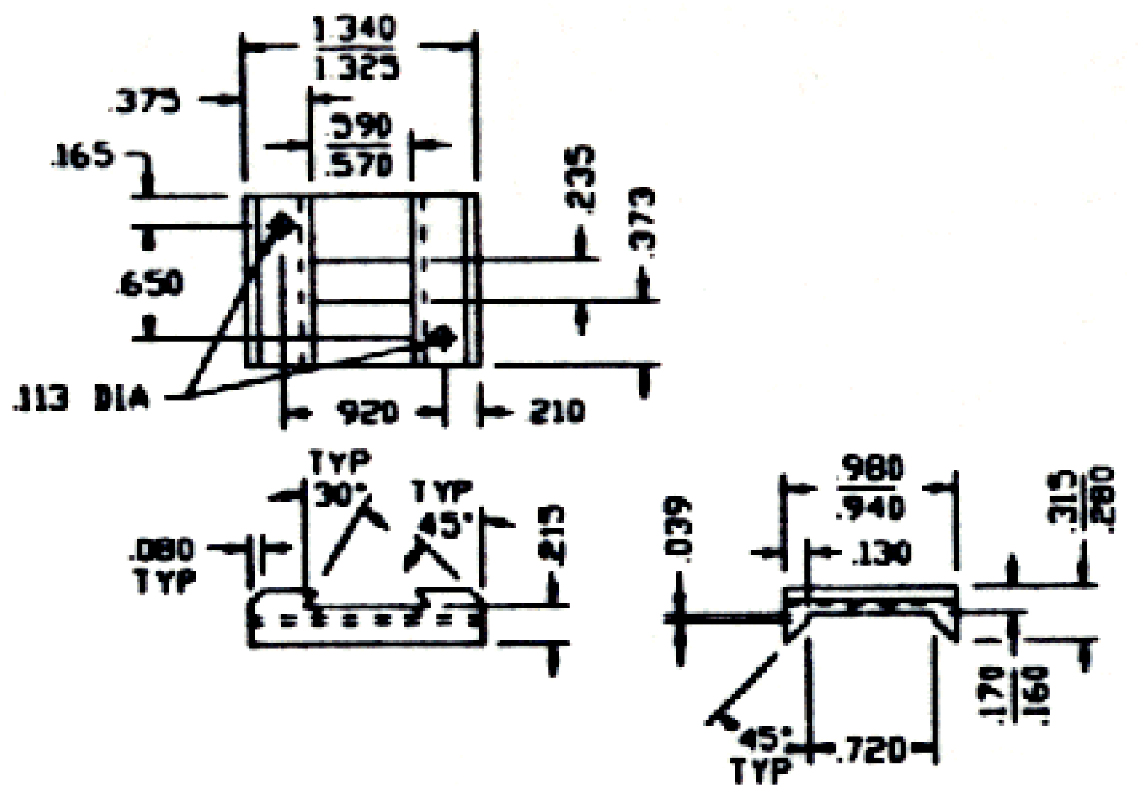
1.340
1.325
.375
.165
.590
.570
.650
.235
.373
.113 DIA
.920
.210
.080 TYP
30° TYP
45° TYP
.215
.039
.980
.940
.130
.315
.280
45° TYP
.720
.170
.160

REAR SIGHT BASE

MATERIAL: 1020 STEEL

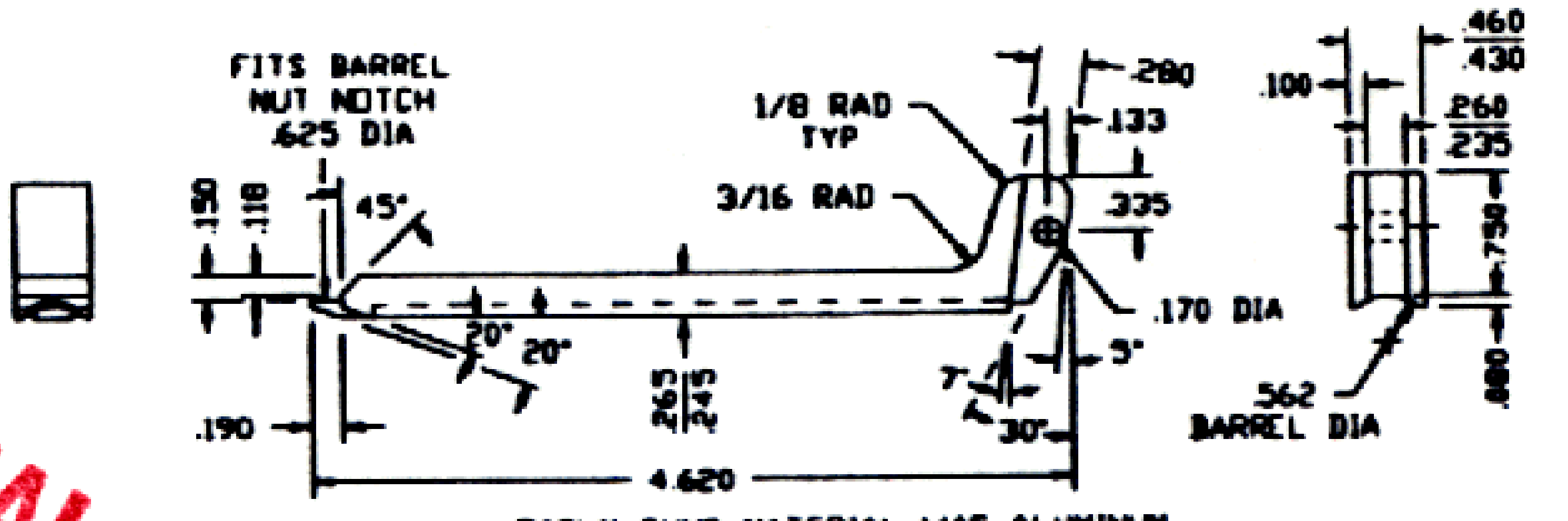
FITS BARREL NUT NOTCH .625 DIA
.150
.118
45°
1/8 RAD TYP
3/16 RAD
.280
.133
.335
.170 DIA
20°
20°
7°
5°
30°
.265
.245
.190
4.620
.100
.460
.430
.260
.235
.750
.880
.562 BARREL DIA

EARLY GUNS MATERIAL WAS ALUMINUM
FEW WERE STAMPED SHEET STEEL
LATE GUNS MATERIAL WAS BAKELITE OR SIMILAR

RESTING BAR

MATERIAL: 6061-T6 ALUMINUM

NOTES:

1. MATERIAL- 1 5/8 O.D. X 1 3/8 I.D. D.O.M. STEEL TUBE
2. FINISH- BLUE
3. O.D. OF RECEIVER TUBE SHOULD MATCH I.D. OF MAGAZINE HOUSING
   AND REAR CUP OF TRIGGER FRAME
4. SLOT SIZES AND LOCATIONS ARE AS FOLLOWS
   MAGAZINE HOUSING AREA - A) 5 SLOTS 2.250 LONG ON LEFT SIDE OF RECEIVER
   AT 20°, 40°, 60°, 80° AND 100°
   B) 2 SLOTS 2.250 LONG ON RIGHT SIDE OF RECEIVER
   AT 80° AND 100°
   MAIN BODY AREA - C) 4 SLOTS 7.750 LONG RIGHT SIDE OF RECEIVER
   AT 60°, 80°, 120° AND 140°
   D) 5 SLOTS 2.250 LONG TOP SIDE OF RECEIVER
   40°, 20°, 0°, 20° AND 40°
   E) 1 SLOT 5.250 LONG TOP SIDE OF RECEIVER AT 60°
   F) 4 SLOTS 3.000 LONG TOP SIDE OF RECEIVER
   AT 40°, 20°, 0° AND 20°
   G) 2 SLOTS 1.000 LONG TOP OF RECEIVER AT 40° AND 60°
   H) 1 SLOT .500 LONG TOP OF RECEIVER AT 40°
5. SLOTS ARE FORMED WITH A CUTTER .200 WIDE FULL RADIUS X .030 DEEP

CONFIDENTIAL

RESTRICTED
MATE [illegible]

SCALE: FULL	MATERIAL: SEE NOTE 1	CKD.	TOLERANCES DEC. 2 PL. ± [illegible] DEC. 3 PL. ± [illegible] ANGLES ± [illegible]
DWN.	FINISH: SEE NOTE 2	DATE	
TITLE: MP-38 RECEIVER		REV.	NO.

SECTION B-B
1.336
.062 RAD
.578 RAD
.072 DIA
.218
OF BARREL HOLE
SECTION D-D RIGHT SIDE
FLAME HARDEN THIS AREA
.801
.195
1.100
1.245
18°
30°
.187 RAD
.165
.703
.393
.800
5.450
.124
.74
.34
.59
.263
.073
.100
1.370
1.452
1.620
1.375-16-NS-3
MAJOR DIA 1.375 MIN
PITCH DIA 1.3344
MINOR DIA 1.3075
SECTION A-A
1.521
1.260
.195
.340
.078 RAD
1.100
1.930
60°
.062 RAD
.156 RAD
.578 RAD
.078 RAD
.218
1.015
.924
1.054
OF BARREL HOLE
OF RECEIVER
15°
.687
.832 RAD
.580 DIA CUTTER
.263
.126
.050
PORTION OF SECTION B-B
.005 BOTH SIDES
VIEW M
.905
SEE VIEW M
.906 RAD
30°
SECTION K-K
13°45' BASIC
4.928
45°
10°
.040
1.05
.24 RAD
OF BARREL HOLE
.032 RAD
.064
SECTION C-C LEFT SIDE
REAM AT ASSEMBLY .159 6 HOLES
P
SECTION J-J
.059
SECTION S-S
.078 RAD
.796 RAD
.687
.312 RAD
.500 RAD
.750
SECTION H-H
1.395
.295
1.250
TRIGGER GUARD RETAINING PIN
.216
.040
.453 RAD
.453 RAD
.453 RAD
.062 RAD
SECTION E-E
.906 RAD
.703 RAD
.187 RAD
1.336
.135
.218
.760
SECTION G-G
2.55
.453 RAD
SECTION P-P
.445 RAD
9.531
1.295
2.365
.580 RAD
TRIGGER GUARD RETAINING PIN
4.750
.600
.500 RAD
.500 RAD
.453 RAD
.580 RAD
.468 RAD
.531 RAD
1.250
SECTION F-F
1.547
2.500 RAD
.078 RAD
.187
10°
1.000 RAD
1.000 RAD
.159 DIA DRILL AND COUNTERSINK 60° TO .047 DEEP OPPOSITE SIDE
.125 RAD
.359
.125 RAD
.125 RAD
.400
.045
1.250
30°
2.500
.502
3.500
LEFT BOLT SUPPORT
.187
.064
45°
.156 RAD
.121
.047
10°
1.000 RAD
1.000 RAD
2.500 RAD
.078 RAD
.187
1.547
.159 DIA DRILL AND COUNTERSINK 60° TO .047 DEEP THIS SIDE
.125 RAD
.359
.125 RAD
.125 RAD
.400
.045
1.250
30°
2.500
.502
3.500
RIGHT BOLT SUPPORT
.078 RAD
SECTION R-R
.064
.187
45°
.121
.156 RAD
.047

NOTES

1. MATERIAL- STEEL FS1050 FED. QQ-S-633
   OPTIONAL PEARLITIC MALLEABLE IRON CASTING CLASS II MIL-I-11444
2. FINISH- PARKERIZE
3. BREAK ALL SHARP EDGES
4. TOLERANCE ±.01 ON ALL DIMENSIONS UNLESS OTHERWISE SPECIFIED

RESTRICTED
MAT

CONFIDENTIAL

SCALE: FULL	MATERIAL: SEE NOTE 1	CKD.	TOLERANCES
DWN.	FINISH: SEE NOTE 2	DATE	ANGLES ± .5°
TITLE: BAR RECEIVER BROWNING AUTOMATIC RIFLE		REV.	NO.

SHEET 1 OF 2

FOR M1918 RIFLE SECOND LINE IS US CAL 30 M1918
FOR M1918 A2 RIFLE SECOND LINE IS US CAL 30 M1918 A2
.70
2.25
.06
.078
BROWNING MACHINE RIFLE
US CAL 30 M1918
000000
SERIAL NUMBER
MANUFACTURERS NAME
.39 MIN
3.00 MAX
RECEIVER MARKING
℄ OF BARREL HOLE
1.115
.09
.141
SECTION N-N
.662
30°
HEAT TREAT THIS SURFACE
.098
.7650
.750 MIN
SECTION L-L
11.528
6.795
4.20
.19 RAD
.070
.02 RAD
.31 RAD
.345
.468 BASIC
1.562 BASIC
.251
RIGHT
LEFT
D
C
.580 ± .005
℄ OF DOVETAIL
.480
.16 RAD
3.45
.50 RAD
1.25 RAD
4.26
.25
10.00
.6913 TO SHARP CORNERS
.7072 TO SHARP CORNERS
.144 DIA No. 27 DRILL HOLE SHALL BE CENTERED WITH DOVETAIL WITHIN .002
11.395
9.505
5.25
1.753
3.72
2.34 RAD
1.75 RAD OPTIONAL .75 RAD
1.75 RAD
.59
.97 RAD
.25
.08 RAD
.27 RAD
.275
℄ OF BARREL HOLE
1.153
2.157
3.200
1.965
.847
2.132
.805
6°
2.625 RAD
1.00 RAD
.25 RAD
.30
.50
.307 DIA
1.00 RAD
.06 RAD
10.095
F
L
A
.906 RAD
.796 RAD
1.20
.906 RAD
11-16-NS-3 MAJOR DIA 1.1000 MIN PITCH DIA 1.0594 MINOR DIA 1.0323
.812
.651
.750
.078
1.343
.250 RAD
1.031 RAD
.632
.671
.064
E
N
9.62
5.475
2.500
1.250
1.060
.20
℄ OF BARREL HOLE
.125 DIA SPOTFACE
.3135 DIA
1.250
1.706
1.679
.078
.126
2.055
.307
1.545
.22 RAD
.230
.350
.515 RAD
.220 DIA
.437
.330
.125 DIA SPOTFACE
.172 RAD
.843 RAD
.163 DIA
.69
.69
3.60
4.90
4.749
1.250
7.045
1.300
8.045
SURFACE MUST BE SQUARE TO BARREL HOLE
B
K
J
G
H
S
.50 RAD
.205
.06 RAD
3.87 TO INTERSECTION OF SHARP CORNER
45°
.06 RAD
1.248
.062 RAD
.25 RAD
.12

CONFIDENTIAL

NOTES

1. MATERIAL- STEEL FS1050 FED QQ-S-633
   OPTIONAL PEARLITIC MALLEABLE IRON CASTING CLASS II MIL-I-11444
2. FINISH- PARKERIZE
3. BREAK ALL SHARP EDGES
4. TOLERANCE ±.01 ON ALL DIMENSIONS UNLESS OTHERWISE SPECIFIED

RESTRICTED
MATERIAL

SCALE FULL	MATERIAL SEE NOTE 1	CKD	TOLERANCES DEC 2 PL. ± [illegible] DEC 3 PL. ± [illegible] ANGLES ± [illegible]°
DWN	FINISH SEE NOTE 2	DATE	
TITLE: BAR RECEIVER BROWNING AUTOMATIC RIFLE		REV.	NO.

SHEET 2 OF 2

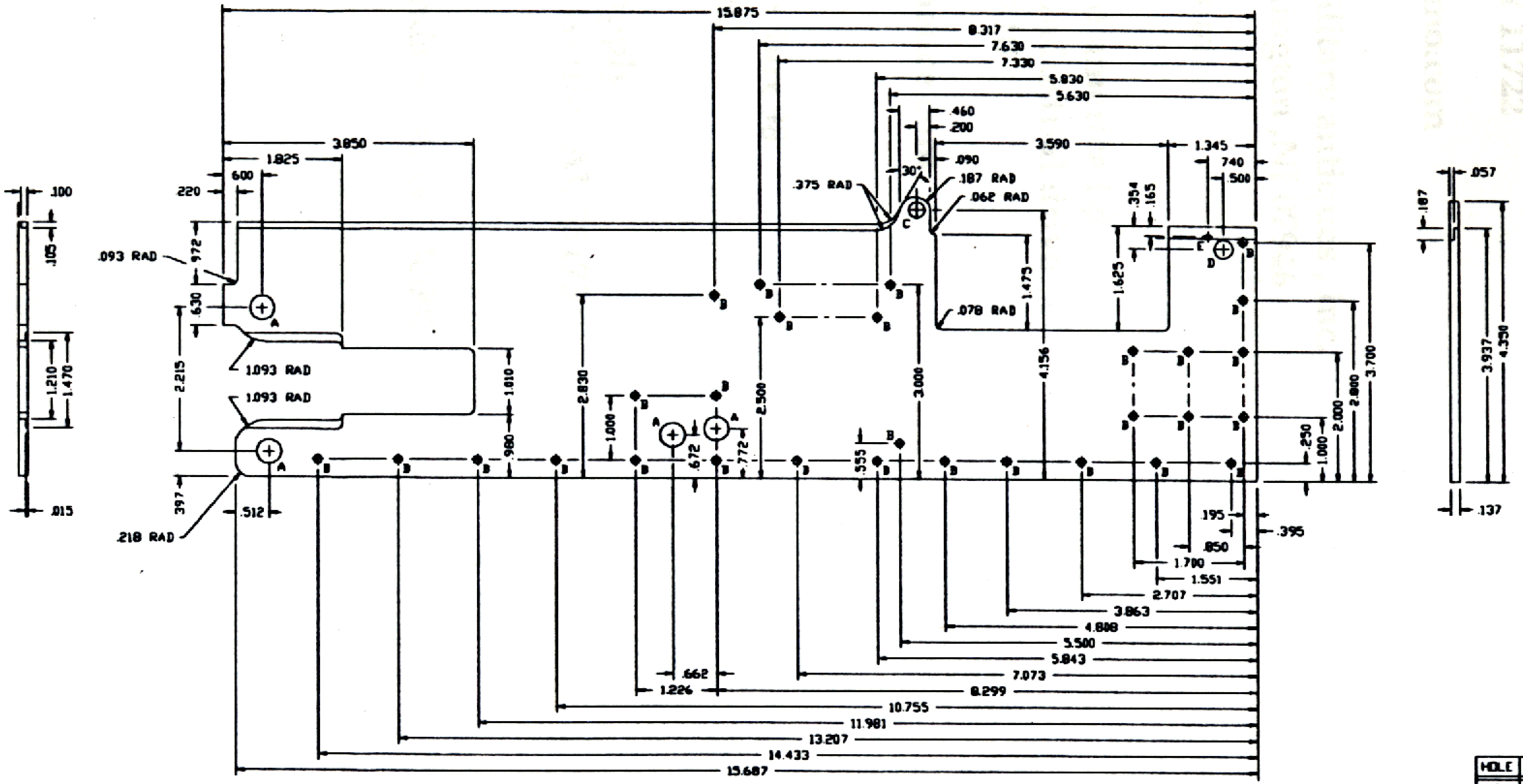
15.875
8.317
7.630
7.330
5.830
5.630
.460
.200
3.850
1.825
.600
.220
.100
.105
.093 RAD
.972
.630
1.210
1.470
2.215
1.093 RAD
1.093 RAD
1.010
.980
2.830
1.000
.672
.772
2.500
3.000
.555
.375 RAD
30°
.090
.187 RAD
.062 RAD
.078 RAD
1.475
4.156
3.590
1.345
.740
.500
.354
.165
1.625
.250
1.000
2.000
2.800
3.700
.015
.397
.512
.218 RAD
.195
.395
.850
1.700
1.551
2.707
3.863
4.808
5.500
5.843
7.073
8.299
10.755
11.981
13.207
14.433
15.687
.662
1.226
.057
.187
3.937
4.350
.137
A
B
C
D
E

DRILL CHART

HOLE	DESCRIPTION	QTY
A	.375 DIA	4
B	.128 DIA (#30 DRILL)	29
C	.250 DIA	1
D	.290 DIA	1
E	.082 DIA (#45 DRILL)	1

NOTES:

1. MATERIAL- 4130,4140,4340 - PRE HEAT TREAT 28-32 R/C
2. FINISH- BLUE
3. ALL #30 DRILLED HOLES ARE FOR .125 DIA RIVETS

RESTRICTED
MATERIAL

CONFIDENTIAL

SCALE: FULL	MATERIAL: SEE NOTE 1	CKD.	TOLERANCES
DWN.	FINISH: SEE NOTE 2	DATE	[illegible]
TITLE: VICKERS RIGHT SIDE PLATE		REV.	ANGLES ± [illegible] NO.

LIST OF PARTS SUPPLIERS

wholesale guns and ammo, inc.
232 blydenburgh rd.
central islip, NY 11722

www.gunsnammo.com

international military antiques , inc.
p.o.box 256 millington ,NJ 07946

www.ima-usa.com

inter ordnance of america l.p.
3305 westwood industrial drive
monroe , NC 28110

www.inter-ordnance.com

sarco , inc.
323 union st. p.o. box 98
stirling , NJ 07980

jeffs shooters supply
p.o.box 1054 trussville , AL 35173

rpb industries
p.o.box 367 avondale est. GA 30002